SHELL DIMENSIONS

LENGTH	WIDTH	HEIGHT	VOLUME	WEIGHT EMPTY	WEIGHT FULL	SURFACE AREA
144" [3658mm]	92" [2337mm]	42.5" [1080mm]	@840 Gl/ 3180 L	1050 lbs/ 477 kg	8055 lbs/ 3654 kg	59.6 sq.ft [5.36sq.m]

NOTE : Dimensions may differ up to 1/2" (13mm) between Spas. Exact measurements should be obtained from delivered unit.

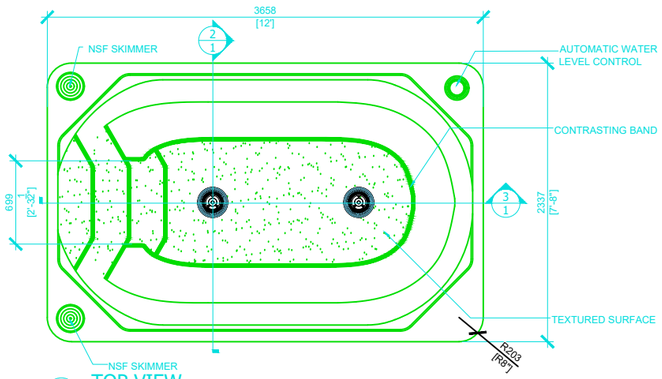

1 TOP VIEW

NTS

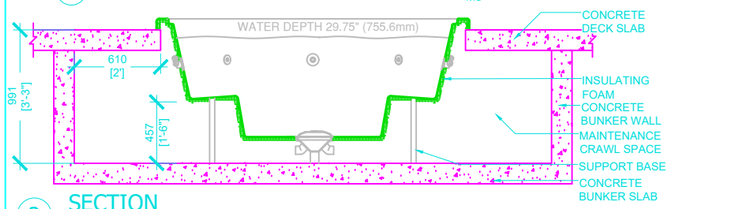

2 SECTION

NTS

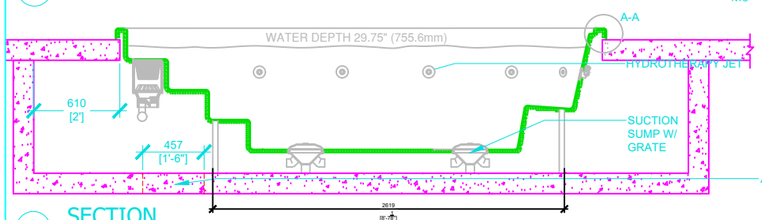

3 SECTION

NTS

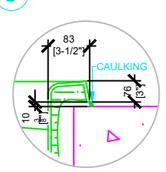

AA DETAIL

NTS

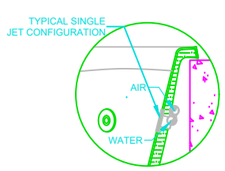

BB DETAIL

NTS

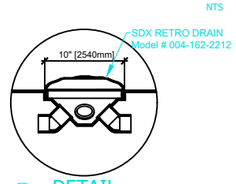

CC DETAIL

NTS

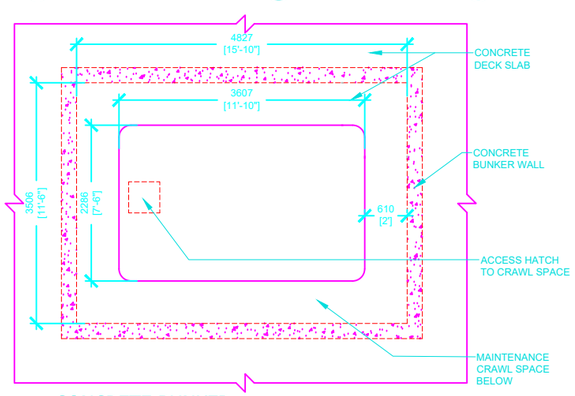

4 CONCRETE BUNKER

NOTE: CONCRETE BUNKER SHOWN IS BASED ON A RECOMMENDED DESIGN AND IS NOT REQUIRED IN ALL INSTANCES

NTS

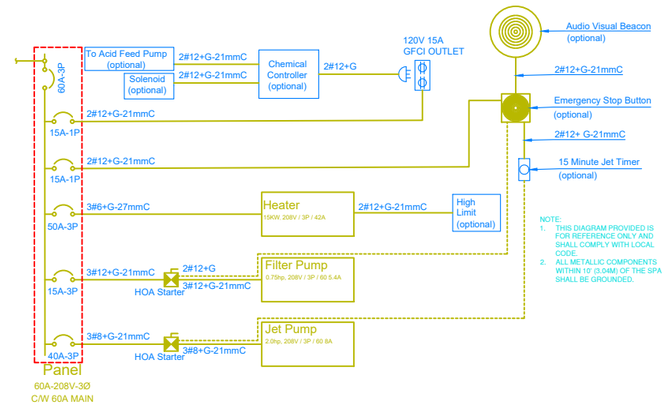

5 ELECTRICAL DIAGRAM 208v 3Ø SYSTEM

NTS

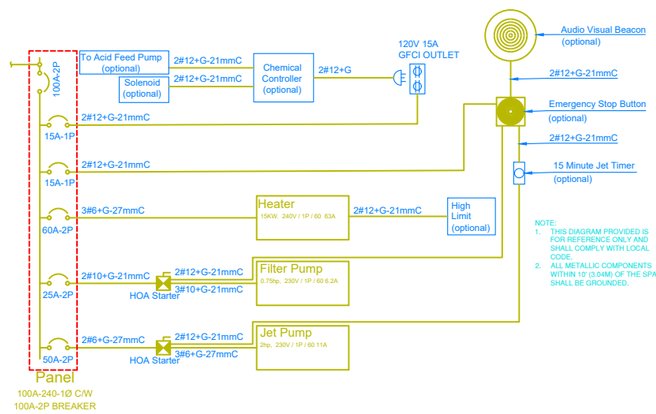

5a ELECTRICAL DIAGRAM 240v 1Ø SYSTEM

NTS

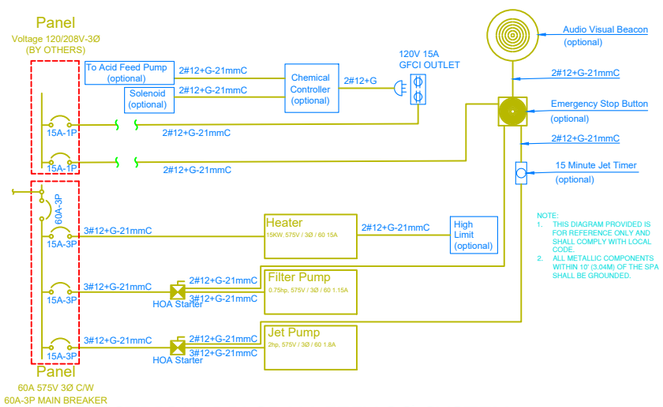

5b ELECTRICAL DIAGRAM 575V 3Ø SYSTEM

NTS

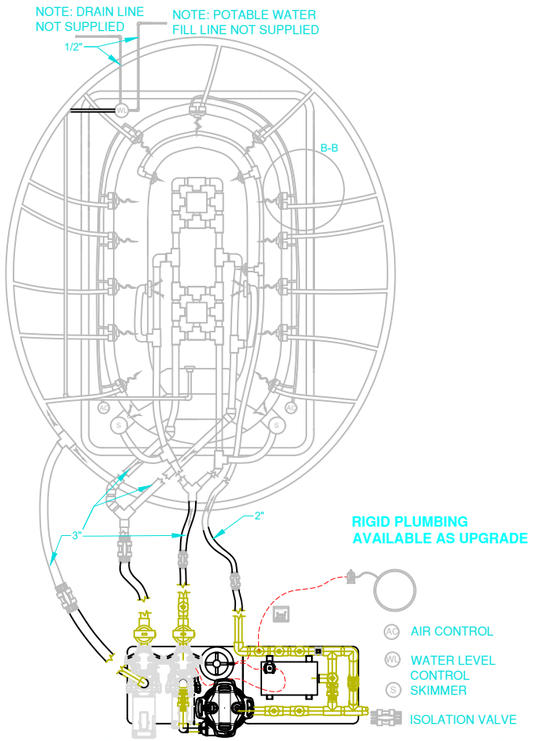

NOTE: IT IS THE RESPONSIBILITY OF THE INSTALLER/OWNER TO VERIFY THAT THE SPA, EQUIPMENT AND SYSTEMS COMPLY WITH LOCAL CODE REQUIREMENTS.

6 PLUMBING DIAGRAM

NTS

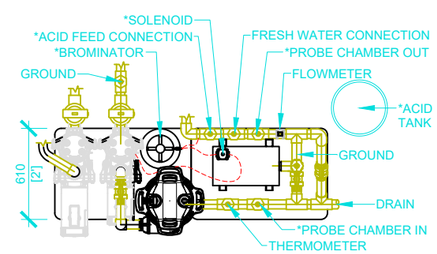

7 MECHANICAL PACK TOP VIEW

NTS

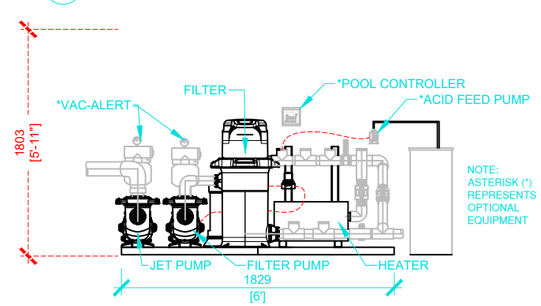

NOTE: MECHANICAL PACK REQUIRES A TOP CLEARANCE OF 71" TO SERVICE THE CARTRIDGE FILTER

8 MECHANICAL PACK FRONT VIEW

NTS

SPECIFICATIONS

1. The shell of the hot tub shall be manufactured of vacuum formed acrylic (.187 sheet) in POLAR WHITE. Hot tub shell overall dimensions; 144" x 92" x 42.5" deep. See dimensional information on this sheet.
2. The acrylic shall be further reinforced with fiberglass resins but may require additional on-site bracing supports (customer's responsibility) under the steps and seats.
3. The shell shall have the following fittings:
   - 3.1. 9 Large hydrotherapy jets
   - 3.2. 4 Small hydrotherapy jets
   - 3.3. 2 Skimmer, (NSF Listed)
   - 3.4. 2 Built in bottom drain sumps with removable grate
   - 3.5. 2 Air control valves
   - 3.6. 1 Water level tank fitting
   - 3.7. 1 Water level controller
   - 3.8. 3 Filtered water return inlets
   - 3.9. 2 Side Wall Suction
4. The hot tub will be insulated with a coating of polyurethane foam, factory plumbed and hydrostatically tested.
5. Recommended HCSP-4 mechanical support system will be shipped on a separate plastic base and shall consist of:
   - 5.1. 1 3/4hp filter pump (NSF Listed)
   - 5.2. 1 200 sq.ft. cartridge filter (NSF Listed)
   - 5.3. 1 2 hp hydrotherapy booster pump (NSF Listed)
   - 5.4. 1 15 kW electric heater c/w flow switch
   - 5.5. 2 Inline thermometers c/w thermowell
   - 5.6. 1 Inline flow-meter
   - 5.7. 1 Water level controller with overflow (located at the shell)
6. Optional Items
   - 6.1. Waterline Tile
   - 6.2. 12V Underwater LED Light
   - 6.3. Second Skimmer
   - 6.4. External Hi-Limit Switch
   - 6.5. Electronic Countdown Timer
   - 6.6. Emergency Push/Pull Button
   - 6.7. Audio Visual Beacon
   - 6.8. Safety Vacuum Release Systems
   - 6.9. Chemical Automation System
   - 6.10. Substitute for Second Feed Pump and Tank
   - 6.11. UV Sanitizer
   - 6.12. Substitute for Sand Filter (NSF Listed)
   - 6.13. Rigid Plumbing
   - 6.14. Additional R12 Insulation
   - 6.15. P-Rail with Flanges
   - 6.16. P-Rail with Anchors
   - 6.17. Safety Cover 4"-3" Tapered Hard Cover
7. Warranties shall be 5 year on the shell structure, 2 years on the acrylic surface and one year on the plumbing, labor, accessories and parts. On-site plumbing is NOT covered.
8. Installation items NOT covered by this specification and considered "by others" are:
   - 8.1. Plumbing services including sanitary and water to the equipment room. Plumbing between the spa shell and mechanical equipment
   - 8.2. location. Heating and ventilation in the equipment room.
   - 8.3. Electrical service connections from the building services to the electrical panel(s), motor, heater and component connections including motor starters, timers, push/pull switches, A/V alarm, grounding of all electrical components and GFCI's.
   - 8.4. Decking and access steps including deck drains.
   - 8.5. Supports under the seats and steps of the shell.

NOTE : All equipment UL and UL-C approved. All fittings NSF and ANSI/ASME LISTED. All submerged suction fittings are VGB Compliant.

HYDRAULIC DESIGN

SPA VOLUME 840 usg
3180 Litre
TURNOVER 12.2 minutes
FILTER FLOW RATE
69 usgpm @ 60' T.D.H.
261.2 LPM @ 18.28 M hd
FILTER AREA 200 sq.ft.
18.55 sq.m.
OPERATING @0.345 usgpm/sq.ft.
@0.234 L/s/m²
FILTER PUMP 3/4 hp

13 HYDROTHERAPY FITTINGS
9 LARGE OPERATING @ 13 usgpm/49.2 Lpm
4 SMALL OPERATING @ 3.25 usgpm/12.3 Lpm
HYDROTHERAPY FLOW RATE
130 usgpm @ 60' TDH
492.1 Lpm @ 18.28 M hd
HYDROTHERAPY PUMP 2 hp

TOTAL FLOW RATE
199 usgpm/ 753.3 Lpm
TOTAL OPEN AREA OF MAIN DRAINS
86.402 sq.in./ 557.43 sq.cm.
VELOCITY THROUGH MAIN DRAINS
0.739 ft.sec/ 0.225m. sec

HydroTher

THIS DRAWING AND THE IDEAS, CONCEPTS, ILLUSTRATIVE AND WRITTEN INFORMATION REPRESENTED THEREBY ARE THE PROPERTY OF HYDROTHER. REPRODUCTION OF ALL OR ANY PART OF THIS DRAWING OR PRINTS THEREOF, OR ANY OTHER UTILIZATION OF ANY CONFIDENTIAL AND PROPRIETARY PROPERTY CONTAINED HEREIN WITHOUT THE PERMISSION OF HYDROTHER IS FORBIDDEN.

No.	Date	Description

Revisions

HYDROTHER
5170A TIMBERLEA BLVD.
MISSISSAUGA, ONT.
L4W 2S5
1 800 891 5811
WWW.HYDROTHER.COM

Project	Hydrother
Title	H-1200C
Drawn By:	Ritika
Scale:	NTS
Date:	Sept 2025
Ch'd By:	BRB
Job No.:	H1200-25

1